SALUS CONTROLS EN

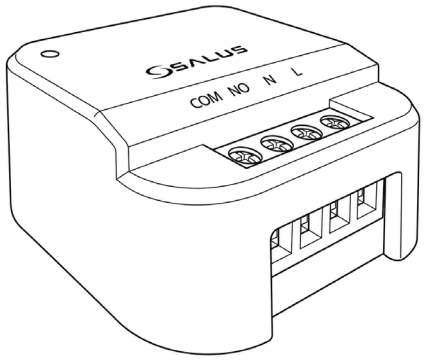

SR868
SMART RELAY
QUICK GUIDE

MULTI-LANGUAGE

MANUAL

Manufacturer: SALUS Controls plc
Units 8-10, Northfield Business Park,Forge Way,
Parkgate Rotherham, S60 1SD, United Kingdom

Importer: Salus Controls European Distribution sp.z o.o.
ul. Szamocka 8, piętro 6., 01-748 Warszawa, Poland

UK: tech@salus-tech.com
DE / NL: info@salus-controls.de
PL: poland@saluscontrols.com
FR: technicalsupport@saluscontrols.fr
RO: tehnic@saluscontrols.ro
DK: Support@salus-controls.dk

Computime

ISO 9001 QUALITY MANAGEMENT

UKAS MANAGEMENT SYSTEMS 0015

www.saluscontrols.com

SALUS Controls is a member of the Computime Group. Maintaining a policy of continuous product development SALUS Controls plc reserve the right to change specification, design and materials of products listed in this brochure without prior notice.

09/2026

CE UK CA RoHS COMPLIANT

Wiring diagrams

1 Electric heater 230V

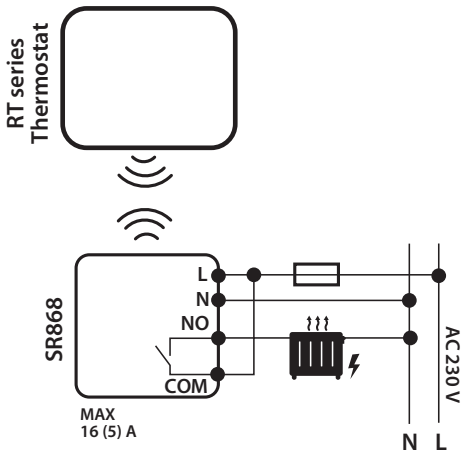

2 Boiler Volt free (0-230V)

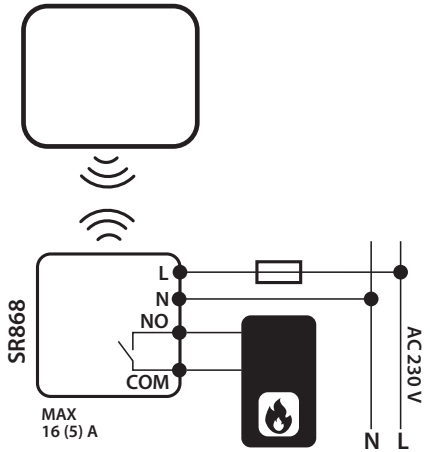

3 Pump 230V

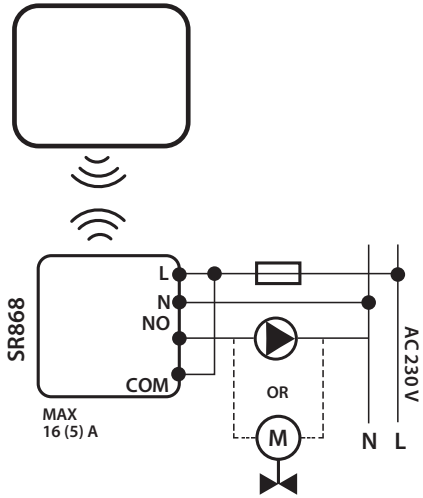

Note: Not compatible with the new RF models that use the 2408 RF protocol like 091Pro-RF and RT320RF.

Introduction

The SALUS RF-Relay is installed directly into a wallbox outlet. It enables you to control any electrical heating via any thermostat with 868MHz RF. Compatible thermostats: RT310RF+, RT510RF+, RT510TX+, RT520RF, RT520TX, 091RFv2, RT310i, iT500.

Product Compliance

This product complies with the essential requirements and other relevant provisions of Directives GPSR 2023/988/EU, RED 2025/138/EU, RoHS 2015/863/EU and 2017/2102/EU, REACH SVHC 253. The full text of the EU Declaration of Conformity is available at the following internet address: www.saluslegal.com

868.0-868.6MHz; <13dBm

Safety Information

Use in accordance to national and EU regulations. Use the device as intended, keeping it in dry condition. Product for indoor use only. Installation must be carried out by a qualified person in accordance to national and EU regulations.

Terminal description

Terminal	Description
COM	Common terminal
NO	Switch Live/Normally open
N	Mains Neutral
L	Mains Live

Technical information

Dimensions	44,9 x 44,9 x 26 [mm]
Input Voltage	230 V AC, +/-10%, 50Hz
Switching Capacity	16(5) A
Frequency	868 MHz
IP Rating	IP30

LED Indication

LED State		Description
RED	ON	The relay is off.
	Flash	The relay is in pairing mode.
GREEN	ON	The relay is on.
	2 X Flash	The relay is writing pairing code.
RED and GREEN	Flash alternatively	The relay is paired but lost link.
	Flash in different sequence	It indicates the software version after reboot.

Pairing mode

The relay stores only one pairing code. After pairing, it will be controlled by only one wireless thermostat. In case you want to add more than one relay, set all relays into pairing mode, including the ones already paired, and start the pairing process.



Press and hold the SYNC button for 5 sec. The red LED will flash once per second to indicate it is ready for receiving pairing signal

Mounting



The relay can be mounted inside wall box Ø 60mm. We recommend using deep wall boxes.