SALUS CONTROLS EN

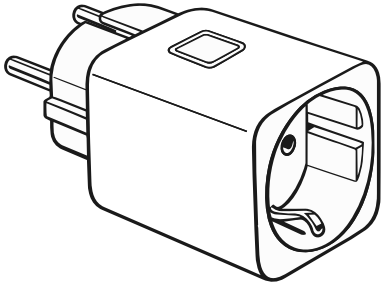

SPE868
SMART PLUG
USER GUIDE

MULTI-LANGUAGE MANUAL

Introduction

Smart Plugs go directly into an open wall socket (like an extension of the outlet) giving a user connected control over the device plugged into the equipment. Use it with RT305TX, RT310TX, RT310iTX, RT510TX, RT520TX, 091FLRFV2, iT500TX thermostats to control the electrical heating in your house.

Product Compliance

This product complies with the essential requirements and other relevant provisions of the following EU Directives: GPSR 2023/988/EU, RED 2025/138/EU, 2015/863/EU amendment RoHS 2017/2102, REACH 253 SVHC 1907/2006. Full text of the EU Declaration of Conformity is available on www.saluslegal.com

868.0MHz<13dBm

Safety Information

Use in accordance to national and EU regulations. Use the device as intended, keeping it in dry condition. Product for indoor use only. Use in accordance with the regulations. Keep your equipment completely dry. Disconnect your equipment before cleaning it with a dry towel.

Product Dimensions

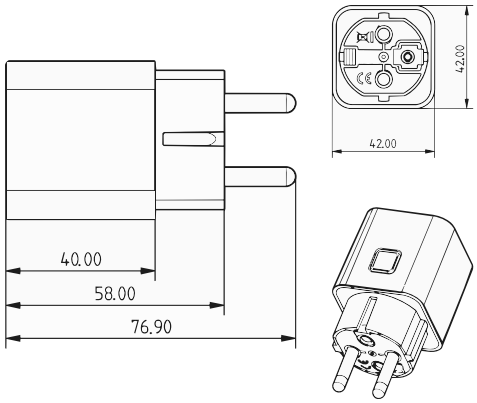

Pairing Process

1. Plug the SPE868 into a wall socket.
2. Put the SPE868 into pairing mode (pulsating red LED, or hold the button ~5 seconds if resetting).
3. Put the compatible SALUS thermostats into pairing mode following its pairing instructions.
4. Wait for the devices to synchronize.
5. The SPE868 LED becomes solid red when paired successfully.

V = 230AC 50HZ
A = 16 Amp max.

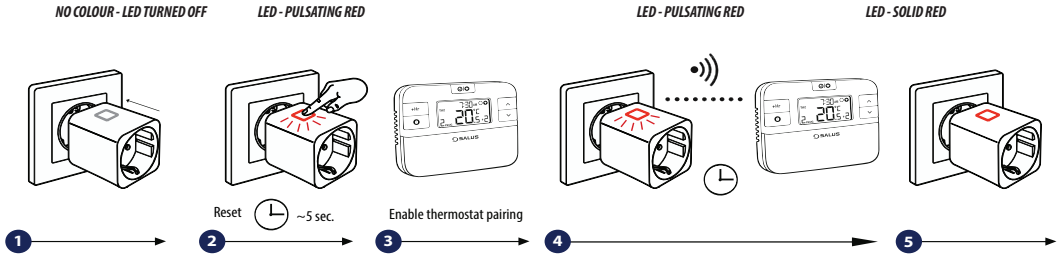

LED Meaning

LED TURNED OFF

SOLID RED - paired, smart plug is OFF

SOLID GREEN - paired, smart plug is ON

PULSATING RED - waiting for pairing
SLOW FLASH RED - overheat protection
FLASHING RED - safe mode, lost connection with thermostat and smart plug is OFF

FLASHING GREEN - when its thermostat is put into testing mode

FLASHING RED AND GREEN - fail safe mode, lost connection with thermostat, smart plug ON

Reset Function

Press and hold the button for 5 seconds, until it flashes red to reset the device and put it in to pairing mode.

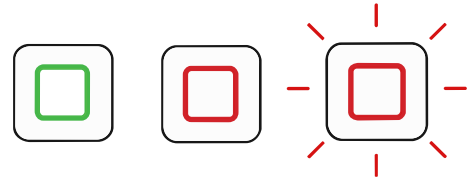

SOLID GREEN SOLID RED FLASHING RED

Technical Specifications

SPE868 SMART PLUG	
Dimensions	42/42/76.9 mm
Input Voltage	230 V AC, +/-10% , 50Hz
Switching capacity	16A
Plug and Socket type	2-Pin EU Schuko plug and Schuko socket
Frequency	868MHz
IP Rating	IP30
Typical indoor range:	30 meters (depends on the indoor structure)

Manufacturer:
SALUS Controls plc
Units 8-10, Northfield Business Park,Forge Way, Parkgate Rotherham, S60 1SD, United Kingdom

Importer:
Salus Controls European Distribution sp.z o.o.
ul. Szamocka 8, piętro 6., 01 748 Warszawa, Poland

UK: tech@salus-tech.com
PL: poland@saluscontrols.com
RO: tehnic@saluscontrols.ro
DK: Support@salus-controls.dk
DE / NL: info@salus-controls.de
FR: technicalsupport@saluscontrols.fr

Computime

www.saluscontrols.com

SALUS Controls is a member of the Computime Group.
Maintaining a policy of continuous product development SALUS Controls plc reserve the right to change specification, design and materials of products listed in this brochure without prior notice.

10/2026