SALUS CONTROLS EN

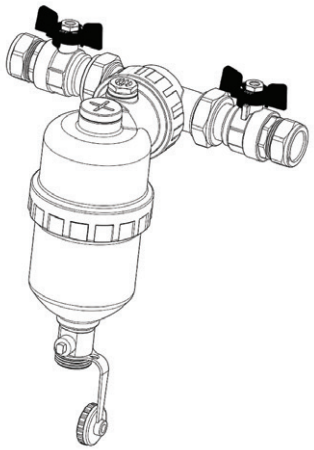

MD22S
22MM IN-LINE MAGNETIC FILTER
QUICK GUIDE

MULTI-LANGUAGE

▪ MANUAL ▪

Manufacturer:
SALUS Controls plc
Units 8-10, Northfield Business Park, Forge Way,
Parkgate Rotherham, S60 1SD, United Kingdom

Importer:
Salus Controls European Distribution sp.z o.o.
ul. Szamocka 8, piętro 6., 01 748 Warszawa, Poland

UK: tech@salus-tech.com
DE / NL: info@salus-controls.de
PL: poland@saluscontrols.com
FR: technicalsupport@saluscontrols.fr
RO: tehnic@saluscontrols.ro
DK: Support@salus-controls.dk

Computime

ISO 9001 QUALITY MANAGEMENT

UKAS MANAGEMENT SYSTEMS 0015

www.saluscontrols.com

SALUS Controls is part of the Computime Group.
In accordance with our policy of continuous product development, SALUS Controls plc reserves the right to change the specifications, design and materials of the products listed in this brochure without prior notice.

11/2026

Product components

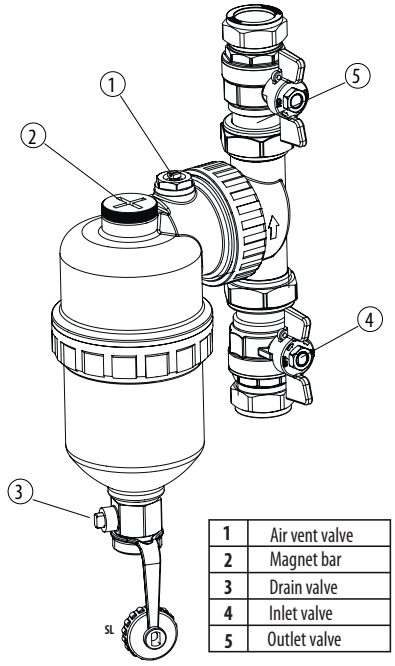

1	Air vent valve
2	Magnet bar
3	Drain valve
4	Inlet valve
5	Outlet valve

Recommended installation location

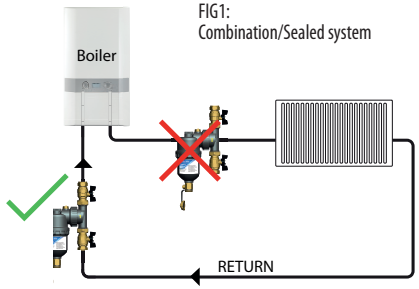

FIG1:
Combination/Sealed system

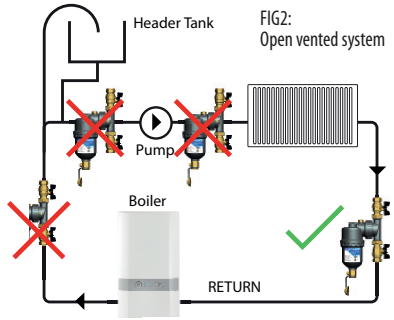

FIG2:
Open vented system

Introduction

The Magnetic Filter is specially designed for central heating systems. It can remove almost all the harmful black suspended iron oxide particles accumulated in the central heating system and protect the complete central heating system.

Product compliance

This product complies with the essential requirements and other relevant provisions of Directives GPSR 2023/988/UE, REACH 251 SVHC 1907/2006. The full text of the EU Declaration of Conformity is available at the following internet address: www.saluslegal.com.

Safety information

Use the device in accordance with national and EU regulations. Use the device for its intended purpose. The product is intended for indoor use only. Installation must be carried out by a qualified person in accordance with national and EU regulations.

Please note:

1. The magnetic filter contains powerful magnets, please keep away from all electronic devices, bank cards and other magnetic devices;
2. The Magnetic Filter contains powerful magnets and should always be used with caution especially for devices such as pacemakers;
3. The Magnetic Filter is a pressurized device, pressure must be released prior to maintenance;
4. The Magnetic Filter device could be very hot during operation. Please be careful!

* In order to maintain grounding continuity in accordance with the current IEE regulations, appropriate grounding cables should be installed on the pipe where necessary to bypass the product.

Note: It is recommended that the magnetic filter is installed and maintained by a competant and qualified person.

Installation

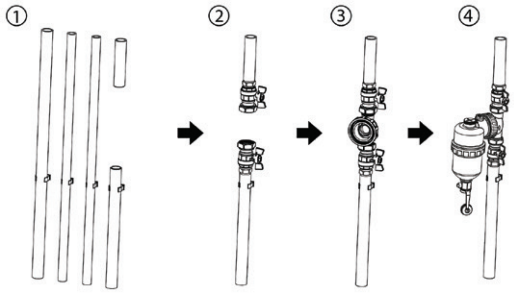

1. Cut and remove the section of the pipe according to the product installation length;
2. Install the valves onto the pipework, hand tighten only at first, then tighten securely the valve to the pipe;
3. Install the filter housing and tighten it;
4. Adjust the Angle and secure the filter;
5. Make sure the valves are open, allow the system to fill, open, and vent the filter through the air vent valve, close when complete.

Maintenance and servicing

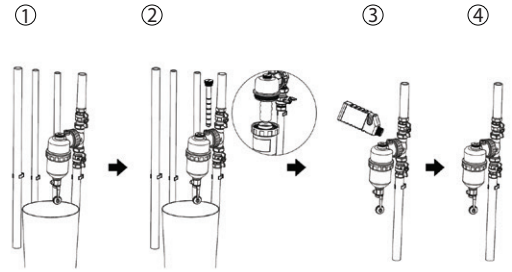

1. Close both the isolation valves;
2. Open the drain valve, place a bucket or similar receptacle below ready to collect the debris. Take out the magnetic bar and store in a safe place;
3. Open the inlet valve to flush out the debris, once all the debris has been removed introduce a suitable chemical inhibitor into the system, we recommend Salus LX1 inhibitor, refit the magnetic bar;
4. Open the inlet and outlet valve, vent the filter through the air vent valve close when complete.Check for any leaks;
5. Complete any relevant documentation.

IE: Dates and inhibitor used.

Technical specifications

Type	In-Line, Magnetic Filter
Diameter	22 mm
Maximum working pressure	6 bar
Maximum operating temp.	95°C
Chemical inhibitor compatibility	Yes (Salus LX1)