SALUS CONTROLS EN

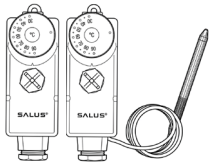

MULTI-LANGUAGE

AT10, AT10F
PIPE/CYLINDER THERMOSTAT
QUICK GUIDE

MANUAL

Introduction

The AT10 / AT10F surface-mounted thermostat (with capillary tube) is a mechanical thermostat that is very easy to install – either on the surface of a pipe or by placing the capillary tube in a sump, e.g. a DHW tank. It allows you to control the temperature of DHW or central heating. The thermostat can be used to switch connected devices on or off depending on the measured temperature. These may include, for example: pumps, pressure switches or boilers.

Product conformity

This product complies with the essential requirements and other relevant provisions of Directives GPSR 2023/988/EU, LVD 2014/35/EU, SVHC 253 and RoHS 2015/863/EU (amended by 2017/2102/EU). The full text of the EU Declaration of Conformity is available at the following address:

www.saluslegal.com

Safety information

Use in accordance with national and EU regulations. Use the appliance for its intended purpose and keep it dry. The product is intended for indoor use only. Installation must be carried out by a qualified person in accordance with national and EU regulations.

Manufacturer: SALUS Controls plc
Units 8-10, Northfield Business Park, Forge Way,
Parkgate Rotherham, S60 1SD, United Kingdom

Importer: Salus Controls European Distribution sp.z o.o.
ul. Szamocka 8, piętro 6., 01 748 Warszawa, Poland

www.saluscontrols.com

Computime

SALUS Controls is a member of the Computime Group. In accordance with its policy of continuous product improvement, SALUS Controls plc reserves the right to modify the technical specifications, design, and materials of the products featured in this brochure without prior notice.

10/2026

Installation

AT10: To install, press the thermostat firmly onto the heating pipe and secure it with the elastic band provided so that the thermostat is in direct contact with the pipe (remove any insulation from the mounting area before securing the sensor). Excess band can be cut off.

AT10F: Secure the thermostat to a flat surface using screws. Then insert the measuring element (capillary tube) into a sleeve, for example, in the hot water tank.

Changing the set temperature

To set the temperature, pull the knob toward you to release it. Then turn the knob to the position that indicates the desired temperature. To save this setting, gently push the knob inward until you hear a click.

How to install the pipe/cylinder thermostat

Remove the button (1) and loosen the large plastic screw (2).

Remove the housing cover.

Connect the conductors according to the diagram shown.



Technical information

Power supply	230 V AC
Maximum load	16 (4) A
Output signal	1/C/2 (NO/COM/NC)
Temperature control range	30-90 °C
Dimensions (mm)	105 x 50 x 45 AT10F capillary length: 1000 mm capillary diameter: 1.3mm temperature bulb diameter: 6.5mm

Terminals description

Terminal	Description
C	Common contact
1	NO – normally open contact
2	NC – normally closed contact
⏚	Earthing

1. Protection against overheating of underfloor heating – if the set temperature is exceeded, terminals C-1 open.

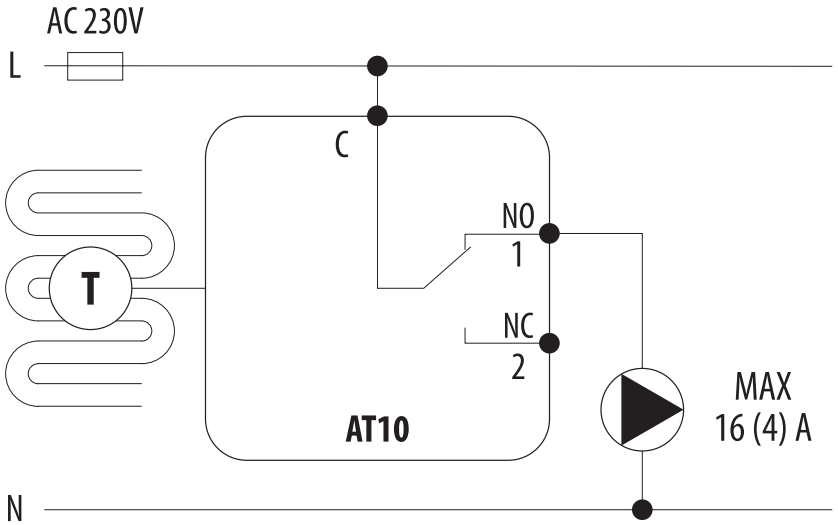

2. Domestic hot water tank (DHW) charging – if the temperature in the tank falls below the set value, terminals C-1 are closed.

